STAINLESS STEEL CONNECTION CLICK

AECS/MDC

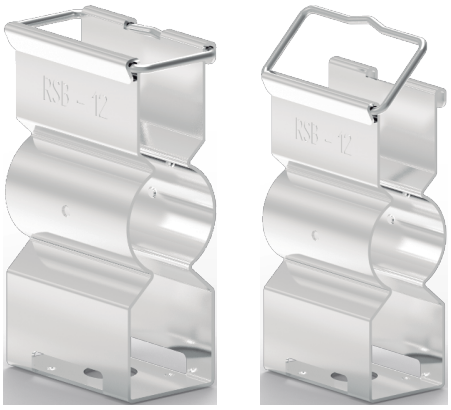

Description

Stainless steel cable clamp with re-openable locking clip for SEC 15 sensor cables.
Tool-free locking mechanism.

Dimensions

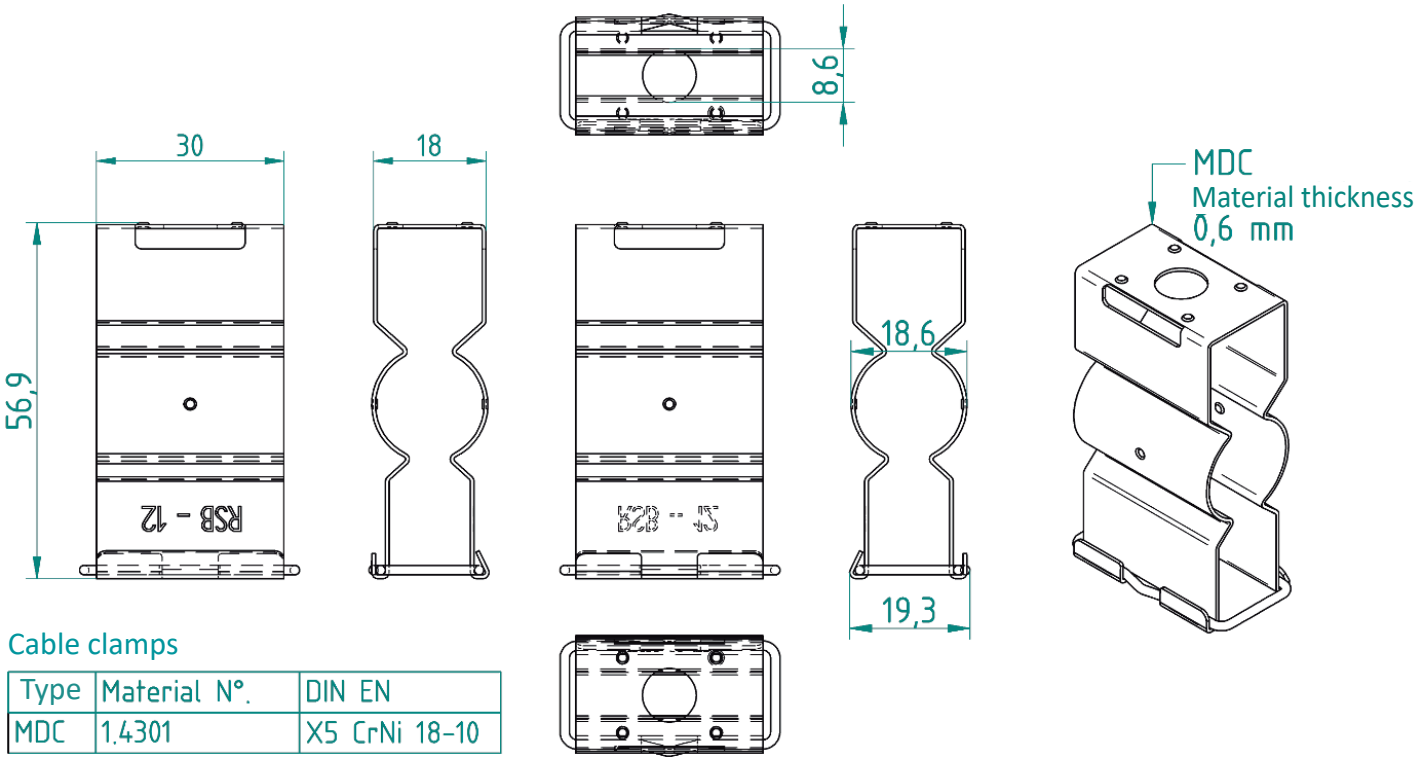

Cable clamps

Type	Material N°.	DIN EN
MDC	1.4301	X5 CrNi 18-10